US 20030210024A1

(19) United States

(12) Patent Application Publication (10) Pub. No.: US 2003/0210024 A1

Liu et al. (43) Pub. Date: Nov. 13, 2003

(54) HIGH EFFICIENCY AC-DC CONVERTER WITH POWER FACTOR CORRECTOR

(76) Inventors: **Joe Chui Pong Liu**, Kwai Hing (HK); **Franki Ngai Kit Poon**, Kowloon (HK); **Man Hay Pong**, Ap Lei Chau (HK)

Correspondence Address:
Joseph M. Sauer
Jones Day
901 Lakeside Avenue, North Point
Cleveland, OH 44114 (US)

(21) Appl. No.: **10/445,655**

(22) Filed: **May 27, 2003**

Related U.S. Application Data

(63) Continuation of application No. 10/040,841, filed on Jan. 7, 2002, now Pat. No. 6,580,259.

(60) Provisional application No. 60/262,186, filed on Jan. 17, 2001.

Publication Classification

(51) **Int. Cl.**[7] **G05F 1/40**

(52) **U.S. Cl.** **323/282**

(57) **ABSTRACT**

A power converter includes a boost converter, a DC/DC converter and a coupler chain. The boost converter receives a rectified AC input and generates a high voltage output. The boost converter includes a zero-voltage-switching transistor that is operable to adjust the power factor of the rectified AC input to generate the high voltage output. The DC/DC converter is coupled to the high voltage output of the boost converter and is configured to generate a regulated output voltage. The DC/DC converter includes a complementary pair of zero-voltage-switching transistors that are operable to regulate the high voltage output of the boost converter to generate the regulated output voltage. The coupler chain is coupled between a current-carrying terminal of the zero-voltage-switching transistor of the boost converter and current-carrying terminals of the complementary pair of zero-voltage-switching transistors in the DC/DC converter The coupler chain is operable to reduce the voltage across the current-carrying terminals of at least one of the zero-voltage-switching-transistors.

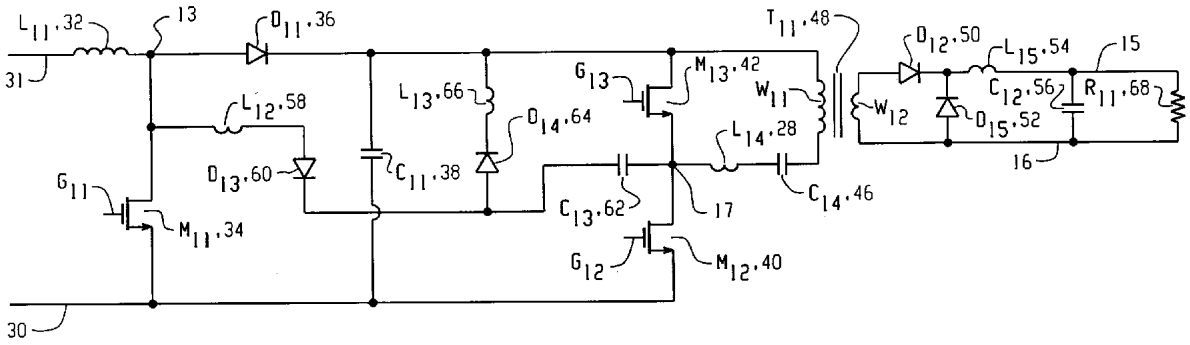

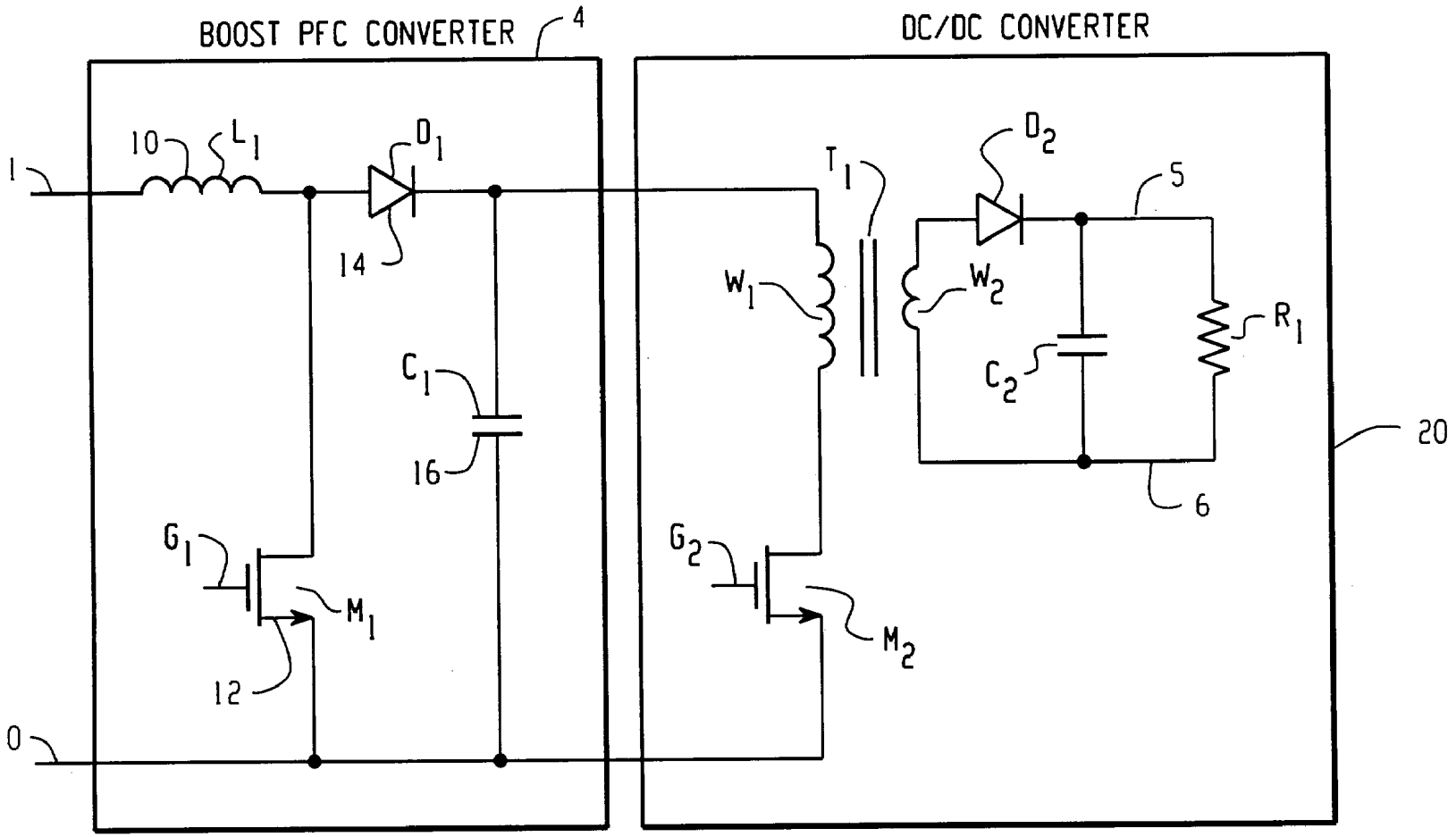

Fig. 1
PRIOR ART

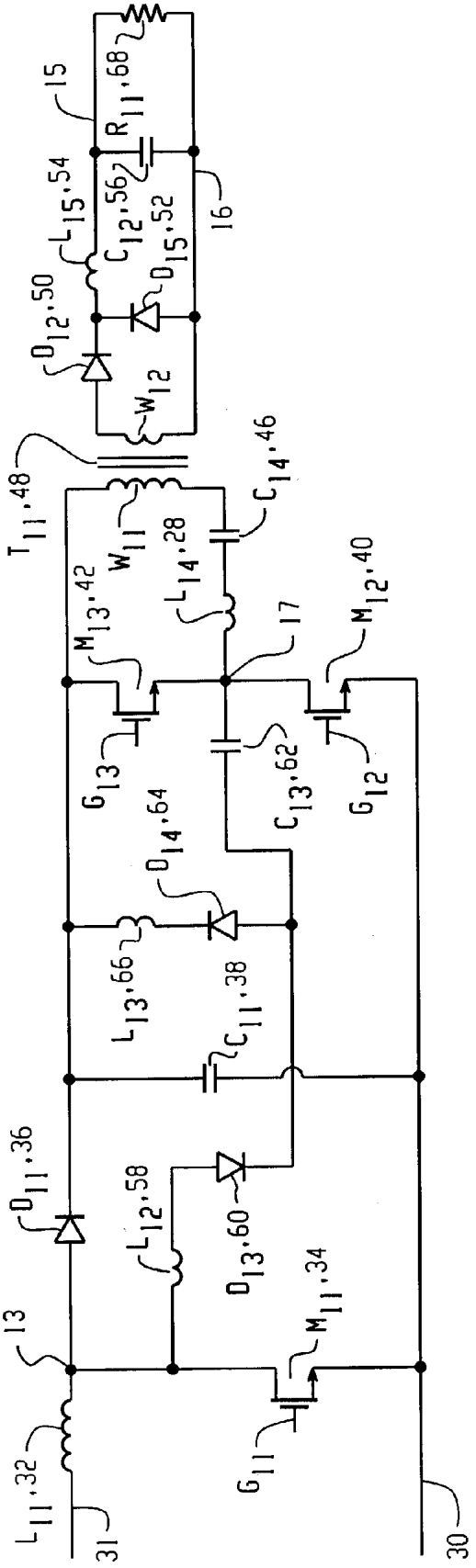
15
R11,68
L15,54
C12,56
D15,52
16
D12,50
W12
T11,48
W11
C14,46
L14,28
M13,42
17
M12,40
G13
C13,62
G12
D14,64
L13,66
C11,38
D11,36
L12,58
D13,60
13
M11,34
L11,32
G11
31
30

Fig. 2

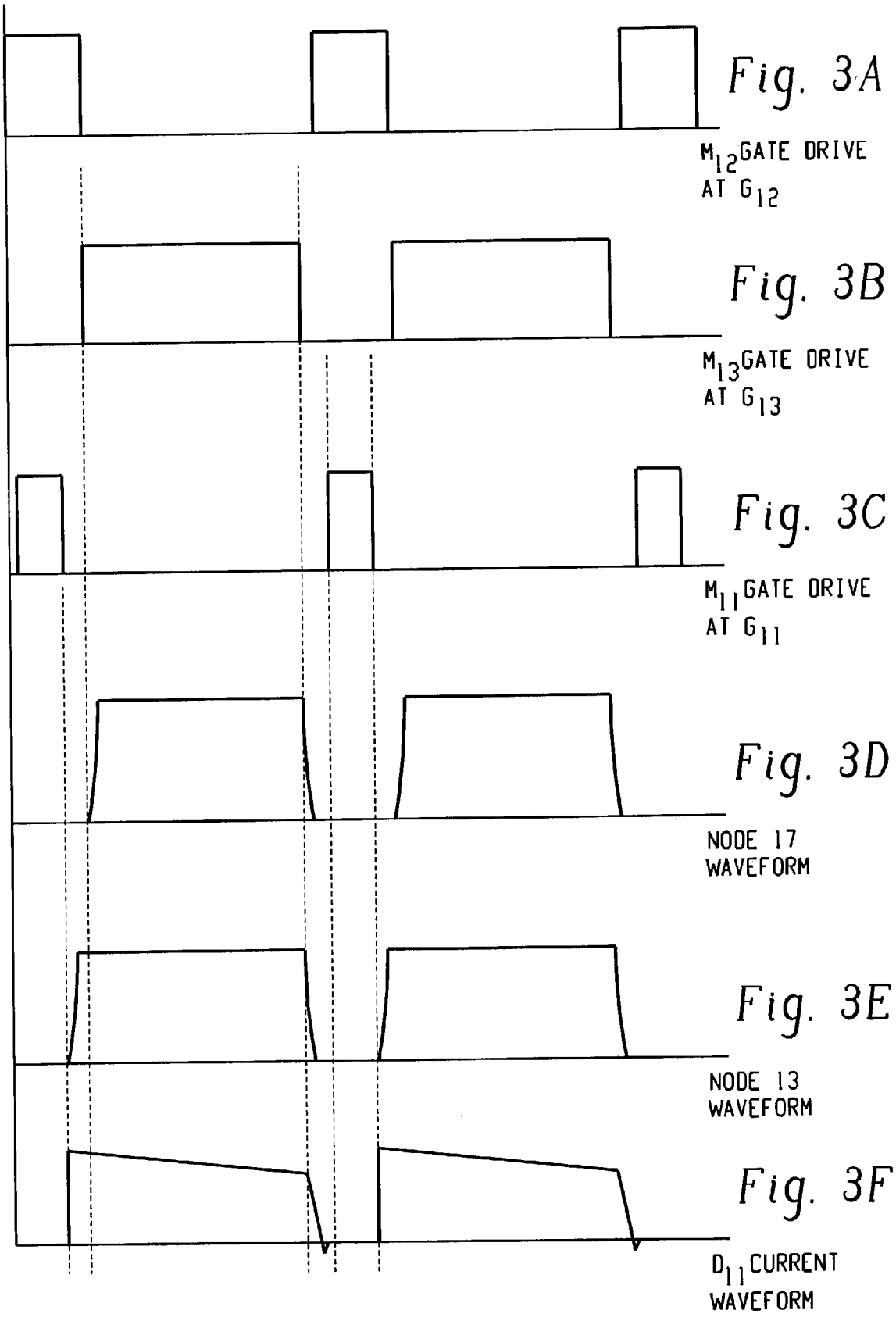

Fig. 3A

Fig. 3B

Fig. 3C

Fig. 3D

Fig. 3E

Fig. 3F

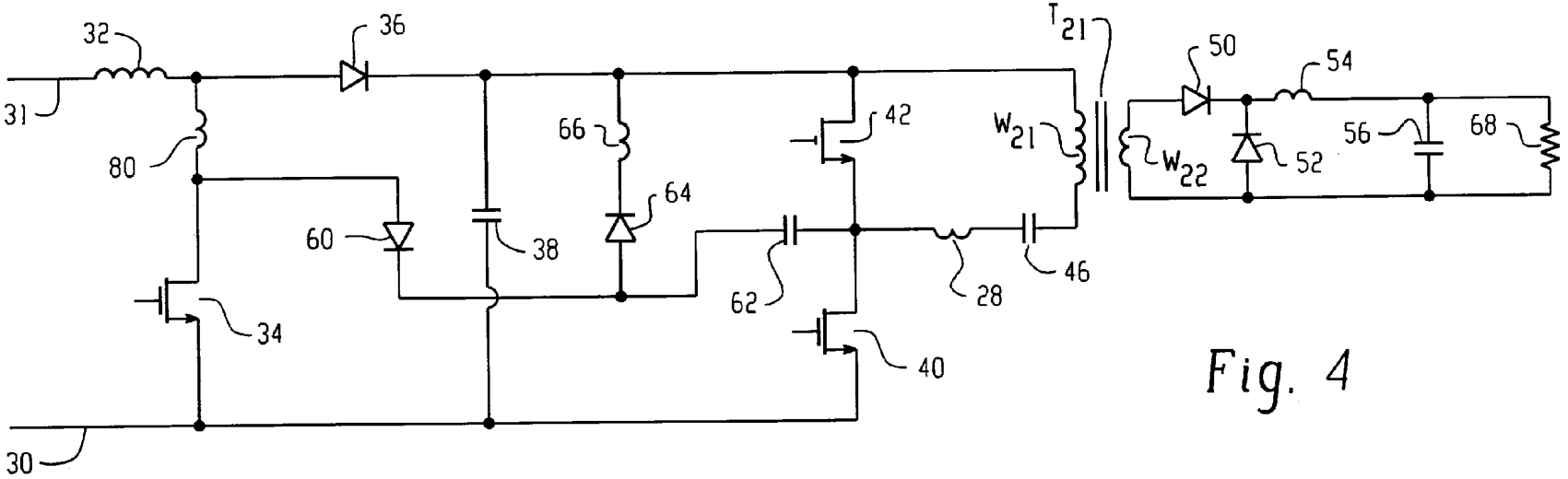
32
36
T_{21}
50
54
31
80
66
42
W_{21}
56
68
W_{22}
52
60
64
38
62
28
46
34
40
30

Fig. 4

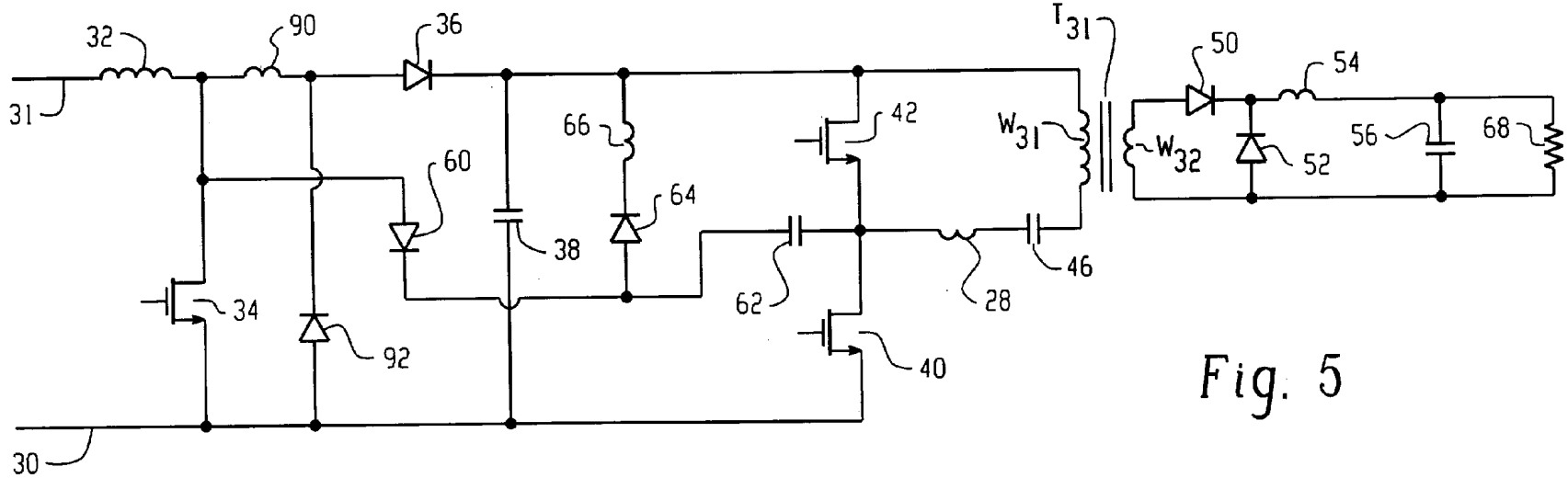
32
90
36
T_{31}
50
54
31
66
42
W_{31}
56
68
W_{32}
52
60
64
38
62
28
46
34
92
40
30

Fig. 5

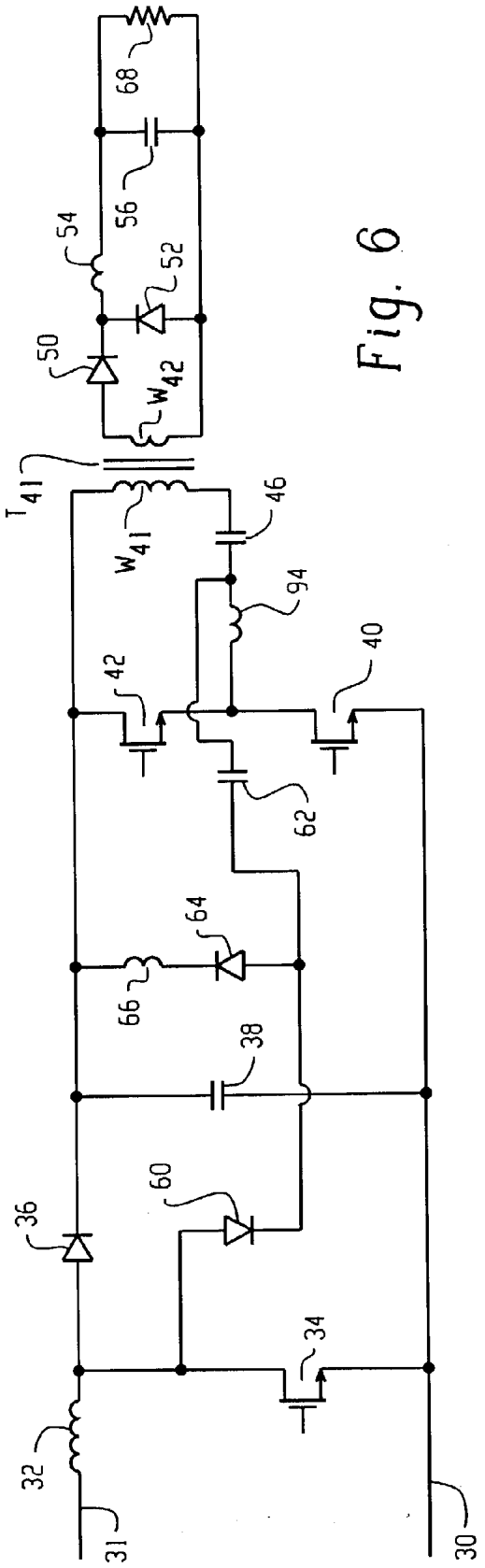
68
56
54
52
50
W_{42}
T_{41}
W_{41}
46
94
42
40
62
64
66
38
60
36
34
32
31
30

Fig. 6

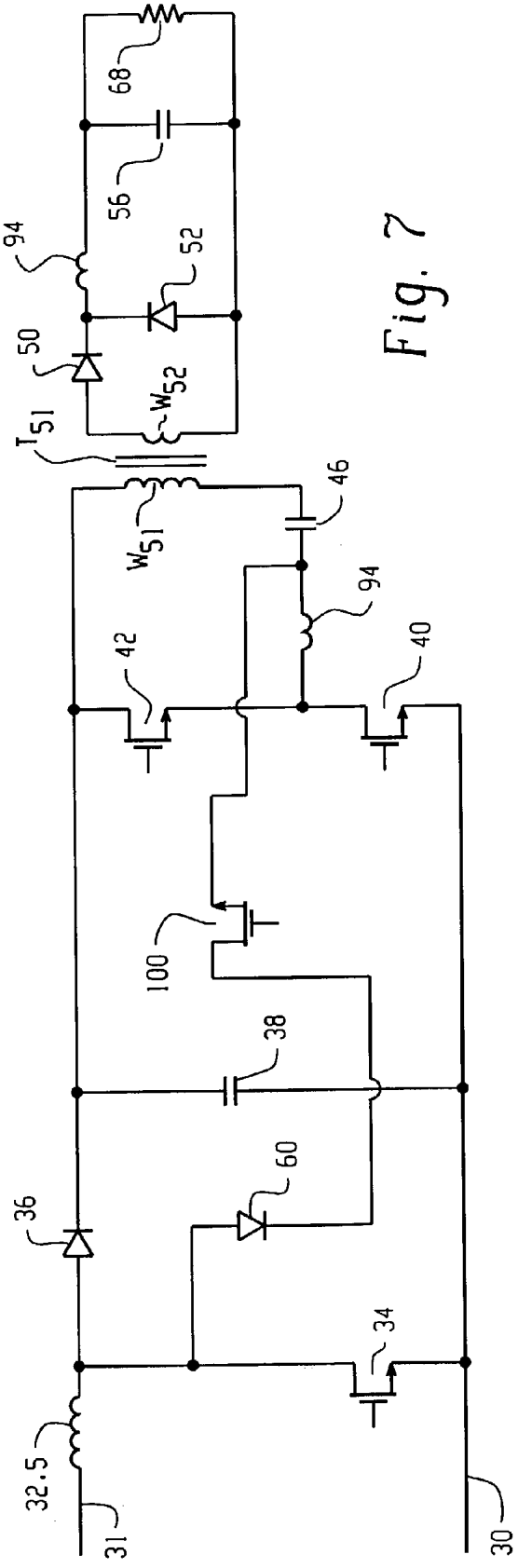
68
56
94
52
50
W_{52}
T_{51}
W_{51}
46
94
42
40
100
38
60
36
34
32.5
31
30

Fig. 7

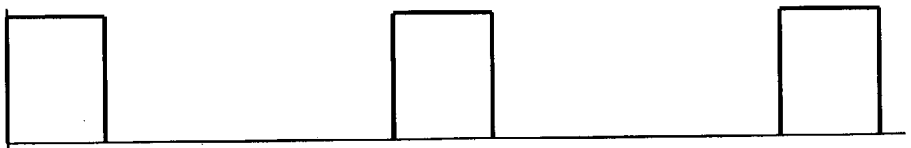

Fig. 8A

GATE DRIVE
FOR SWITCH 40

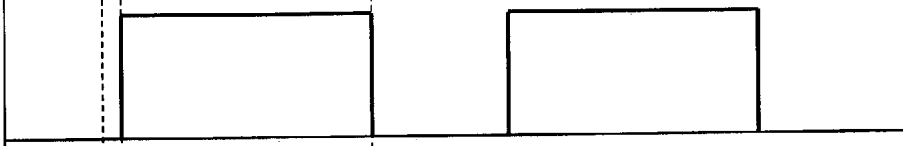

Fig. 8B

GATE DRIVE
FOR SWITCH 42

Fig. 8C

GATE DRIVE
FOR SWITCH 34

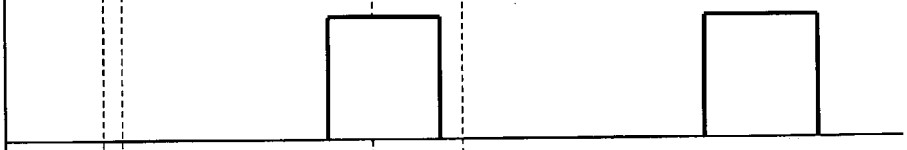

Fig. 8D

GATE DRIVE
FOR SWITCH 100

HIGH EFFICIENCY AC-DC CONVERTER WITH POWER FACTOR CORRECTOR

CROSS-REFERENCE TO RELATED APPLICATIONS

[0001] This application is a continuation of U.S. application Ser. No. 10/040,841, filed on Jan. 7, 2002, and entitled "High Efficiency AC-DC Converter With Power Factor Corrector," which claims priority from and is related to U.S. Provisional Application No. 60/262,186, filed on Jan. 17, 2001, and entitled "A High Efficiency AC-DC Converter With Power Factor Corrector."

BACKGROUND

[0002] 1. Field of the Invention

[0003] This invention relates to the field of power converters. Particularly, this invention relates to the field of AC to DC converters with Power Factor Correction (PFC).

[0004] 2. Description of the Related Art

[0005] AC/DC converters need power factor correction in order to fulfill international standards of low input harmonic current content. A front-end boost PFC converter is one way to obtain good input harmonic current to meet these international standards. Generally, another DC/DC converter is cascaded from the front-end boost PFC converter to provide a steady output voltage.

[0006] **FIG. 1** shows a typical configuration of an AC-DC converter with power factor correction. Rectified AC is fed to input terminals of a boost converter **4** at nodes **0** and **1**. The boost converter **4** includes an inductor L_1 **10**, MOSFET switch M_1 **12**, diode D_1 **14** and capacitor C_1 **16**. A series of Pulse Width Modulated (PWM) voltage pulses are fed to the gate terminal G_1 of the MOSFET switch **12**. The pulse width of the voltage pulses are programmed to make the input current follow the shape of the input sinusoidal voltage and build up a voltage across capacitor **16**. A DC/DC converter **20** converts the voltage across capacitor **16** to a regulated DC voltage across output nodes **5** and **6**.

[0007] A problem in boost converters is the reverse current of the diode **14** when the switch **12** turns on. When the switch **12** turns on, it draws reverse recovery current through the diode **14** and turns the switch **12** off abruptly to block the reverse voltage equal to the output voltage of the boost PFC converter **4**. The output voltage is always higher than the peak of the rectified AC and very often is close to 400V. This high output voltage causes a large amount of switching loss when the diode **14** is turned off. This switching loss increases with frequency. However, high switching frequency is often required to reduce the size and weight of the passive components. Thus PFC boost converter **4** generally are lossy circuits due to the high switching frequencies of the circuit. In fact, the switching loss is associated with every switch in the boost converter **4** and every switch in the DC/DC converter **20**.

[0008] Previous work uses various techniques to reduce switching losses. In U.S. Pat. No. 5,313,382, Farrington discloses a boost converter with an auxiliary switch and a resonant network to achieve reduced voltage stress at a main power switch during turn on. The boost converter also enables a soft turn off of the boost rectifier. The auxiliary switch of the boost converter is turned on without reduced voltage condition, but it has a zero current condition. In U.S. Pat. No. 5,633,579, Kim discloses a boost converter with a stress energy reproducing snubber circuit in order to reduce the stress energy of the boost rectifier during turn off. The snubber circuit reduces the voltage stress on a main switch of the boost converter during turn on. In U.S. Pat. No. 5,748,457, Poon discloses a DC/DC converter which reduces voltage stress by means of zero voltage switching, but it has no boosting and power factor correction effect.

[0009] In addition to soft switching, another problem with PFC converters is control of the switching. Some prior art techniques attempt to integrate the PFC converter and the DC/DC converter. Most of these prior art techniques include converters with fewer degrees of freedom which results in restrictions to operate the converters in certain modes, such as the discontinuous mode. These restrictions prevent maximized utilization of all the components.

SUMMARY OF THE INVENTION

[0010] A power converter includes a boost converter, a DC/DC converter and a coupler chain. The boost converter receives a rectified AC input and generates a high voltage output. The boost converter includes a zero-voltage-switching transistor that is operable to adjust the power factor of the rectified AC input to generate the high voltage output. The DC/DC converter is coupled to the high voltage output of the boost converter and is configured to generate a regulated output voltage. The DC/DC converter includes a complementary pair of zero-voltage-switching transistors that are operable to regulate the high voltage output of the boost converter to generate the regulated output voltage. The coupler chain is coupled between a current-carrying terminal of the zero-voltage-switching transistor of the boost converter and current-carrying terminals of the complementary pair of zero-voltage-switching transistors in the DC/DC converter The coupler chain is operable to reduce the voltage across the current-carrying terminals of at least one of the zero-voltage-switching-transistors.

BRIEF DESCRIPTION OF THE DRAWINGS

[0011] **FIG. 1**(Prior Art) shows a typical configuration of an AC-DC converter with power factor correction;

[0012] **FIG. 2** shows a circuit comprising a first embodiment of the present invention;

[0013] **FIGS. 3A** to **3**F show graphs of voltage and current during operation of the circuit of **FIG. 2**;

[0014] **FIG. 4** shows a circuit comprising a second embodiment of the present invention;

[0015] **FIG. 5** shows a circuit comprising a third embodiment of the present invention;

[0016] **FIG. 6** shows a circuit comprising a fourth embodiment of the present invention;

[0017] **FIG. 7** shows a circuit comprising a fifth embodiment of the present invention; and

[0018] **FIGS. 8A** to **8**D show graphs of the driving waveforms for the switches of the circuit of **FIG. 7**.

DETAILED DESCRIPTION OF THE PREFERRED EMBODIMENTS

[0019] With respect to the drawing figures, a circuit comprising a first embodiment of the present invention is shown

in **FIG. 2**. The invention includes various interconnected parts that define a plurality of devices that can function together. The circuit includes a boost converter, a DC/DC converter, a coupler chain, a discharging chain, and a soft switch inductor **28**. The boost converter includes an inductor **32**, a MOSFET switch **34**, a diode **36** and a capacitor **38**. The DC/DC converter includes MOSFET switches **40** and **42**, a capacitor **46**. A transformer **48** in the DC/DC converter, having windings W_{11} and W_{12}, couples the switches **40** and **42** to diodes **50** and **52** which are coupled to an inductor **54** and a capacitor **56**. The resistance **68** is the load of the converter. The coupler chain includes an inductor **58**, a diode **60** and a capacitor **62**. The discharge chain includes a diode **64** and an inductor **66**. Input terminals **30** and **31** are coupled to a rectified AC source. The input terminals **30** and **31** feed the boost converter. A series of Pulse Width Modulated (PWM) voltage pulses are injected into the boost converter on the gate G_{11}, of the switch **34**. The PWM signal is programmed to make the shape of the averaged input current follow the shape of the input voltage and produce a high power factor. A boosted voltage across the capacitor **38** is then the input voltage of the DC/DC converter. The MOSFET switches **40** and **42** are programmed to turn on and turn off to give a regulated output voltage. These switches **40** and **42** are coupled to the switch **34** through the coupler chain, which couples the boost converter to the DC/DC converter. The discharge chain couples the coupler chain to the input of the DC/DC converter so that the discharge chain can discharge the capacitor **62** and the inductor **58** of the coupler chain.

[**0020**] The soft switch inductor **28** is coupled to switches **40** and **42**. The circuit as a whole operates the switches **34**, **40**, and **42** so as to soft switch each of the switches **34**, **40**, and **42** in the circuit. When the switch **42** turns off from its on state, current in the inductor **28** continues to flow and exchanges charge in capacitance across the switches **42** and **40**. The voltage across the switch **40** then falls to zero.

[**0021**] The switch **40** is programmed to turn on at zero voltage. When the voltage across the switch **40** falls, then the coupler chain of components is activated because the boost switch **34** is in the off state and the diode **36** is conducting. A resonant current flows through this chain and pulls current from the boost inductor **32**. Current through the diode **36** is reduced at a controlled rate and the turn off loss through the diode **36** is largely reduced. The resonant current will eventually become larger than the inductor current, which causes the diode **36** to turn off. The voltage across the switch **34** continues to fall under the influence of the resonant current in the coupler chain until it becomes substantially zero. Then, the switch **34** is programmed to turn on and the switching loss of the switch **34** is substantially reduced.

[**0022**] After the switch **34** remains on for the period of time needed by the boost converter, the switch **34** may be turned off regardless of the state of switches **40** and **42**. These switches **40** and **42** are complementary, such that when one switch is on the other switch is off. A small time gap between switches avoids shoot through. The time gap is very small and it is regarded that **40** and **42** operate asymmetrically. Thus, as the switch **34** is turned off, there are two cases of operability for switches **40** and **42**. A first case where the switch **40** is on and the switch **42** is off, and a second case where the switch **40** is off and the switch **42** is on.

[**0023**] In the first case, the capacitor **62** is settled to a voltage, when the switch **34** turns off, current is diverted to the capacitor **62** which acts like a snubber capacitor. Its voltage will eventually settle to the line voltage after the switch **34** has turned off.

[**0024**] In the second case, the capacitor **62** has discharged to near zero and does not interfere with the switching off of the switch **34**. Current flows through the inductor **32** and the boost diode **36** like the current would in prior art boost converter.

[**0025**] The states of switches **40** and **42** may also be changed at any time after the switch **34** has turned on at the beginning of a duty cycle. Again there are two cases when the switch **40** turns off and the switch **42** turns on. The first case is where the switch **34** is still on and the second case is where the switch **34** is off. In both cases, the diode **60** prevents the initiation of resonant current through the inductor **58**. When the switch **40** is turned off, energy in the inductor **28** attempts to raise the voltage across the switch **40** and reduce the voltage across the switch **42**. Resonance in the coupler chain discharges the charge on the capacitor **62**. When the voltage across the switch has fallen to substantially zero it is programmed to turn on. Thus the switch **42** can turn on at a voltage substantially close to zero. The switch **42** remains on for its designated duty cycle. When the switch **42** is turned off, its current has changed direction, the voltage of the capacitor **62** is zero and the whole switching process will repeat.

[**0026**] With respect to drawing **FIGS. 3A** to **3F**, the graphs of voltage and current during operation of the circuit of **FIG. 2** are shown. **FIGS. 3A and 3B** show typical asymmetric gate driving pulses for the MOSFET switches **40** and **42**. The duty cycle of the control pulses are programmed to maintain a regulated DC output voltage at the converter output terminal across the resistor **68** shown in **FIG. 2**. A small idling time period is inserted between the turn off and turn on of the switches **40** and **42**, as shown in the timing of the gate pulses to drive the switches in **FIGS. 3A, 3B** and **3C**. The switch **34** **(FIG. 3A)** in the boost converter is turned on shortly after the switch **40** **(FIG. 3B)** in the DC/DC converter has turned on but may turn off at any time in the cycle as explained above.

[**0027**] In **FIGS. 3D and 3E**, when the switch **42** turns off, current in the inductor **28** pulls the voltage at the drain terminals of the switches **40** and **34** at nodes **17** and **13** respectively, although these voltages may not fall at the same time and rate. Also, **FIG. 3D** shows that when the switch **40** turns off, the current flowing in the inductor **28** will push the voltage at node **17** high and reduce the voltage across the switch **42**. The gate driving pulse will turn on the switch **42** when its drain source voltage has dropped to substantially zero. In **FIG. 3F**, current through the diode **36** decreases in this transient period until it reaches zero. The switch **34** is programmed to turn on after its voltage is substantially zero. The same switching applies to the switch **40** which is programmed to turn on after its voltage is substantially zero. Thus, both switches **34** and **40** have zero voltage turn on. The diode **36** can then switch off with less reverse current. **FIG. 3F** shows the current slope of the diode **36** has been limited, the reverse current can be controlled to be small which limits any significant losses. Thus, all switches **34**, **40** and **42** may turn on at zero voltage state.

[0028] With respect to **FIG. 4, a** second embodiment of the present invention is shown. This second embodiment differs from the first embodiment in the placement of a small inductor **80** for resonance to provide zero voltage switching of the switch **34** in the boost converter. In the first embodiment, the small inductor **58** is placed in the coupling chain of components connecting the boost converter and the DC/DC converter. Nevertheless, this is not the only location to place the inductor. In this second embodiment, the inductor **80** is placed in series with the switch **34** in the boost converter. The switches **34**, **40** and **42** are controlled similar to the switches in **FIG. 2**, and the output of the circuit is similar.

[0029] When the switch **34** switches off and the capacitor **62** has discharged to near zero, the energy stored in the inductor **80** is released through the diode **60** and flows through the coupling and discharging branches. The current through the inductor **80** settles to zero and the inductor current through the inductor **32** will flow through the boost diode **36** similar to other boost converters.

[0030] A third embodiment of the present invention is shown in **FIG. 5**. This third embodiment differs from the first two embodiments in the placement of a small inductor **90** and a diode **92** for resonance to provide zero voltage switching of the switch in the boost converter. This third embodiment has the inductor **90** placed in between the input inductor **32** and the diode **36** of the boost converter. Another leg, which includes the diode **92**, is placed in the circuit between the inductor **90** and the diode **36**, and is then extended to the input terminal **30**. The switches **34** and **40** act substantially the same in this embodiment as they act in the first embodiment. When the voltage across the switch **40** falls, the voltage across the switch **34** falls simultaneously due to the coupling of the switches by the capacitor **62**.

[0031] The aforementioned embodiments use two small inductors, one coupled to the boost diode **36** and another one placed near the DC/DC converter primary side switches **40** and **42**, to obtain less voltage stress during turn off of the diode **36** and turn on of the switches **40** and **42**. Nevertheless, it is possible to combine these two small inductors into one inductor to further reduce the converter component count.

[0032] Turning now to **FIG. 6, a** circuit comprising a fourth embodiment of the present invention is shown. The embodiment is similar to the first embodiment, except the inductor **58** (**FIG. 2**) in the coupler chain and the soft switching inductor **28** (**FIG. 2**) are combined into a single inductor **94** coupled to the switches **40** and **42**. The inductor **94** provides soft turn off of diode **36** and also reduces voltage stress turn on of the switches **34**, **40**, and **42**.

[0033] When the switch **40** turns off, the current flowing in the series inductor **94** will continue to flow and discharge the stray capacitance across the drain source of the switch **40**. The voltage across the switch **42** will drop accordingly. The switch **40** then turns on when the voltage across the switch **40** drops to zero. The current flow direction of the inductor **90** then reverses and shunts the current flowing through the boost diode **36**. The inductor **94** also discharges the stray capacitance of the switch **34** via the path comprising the diode **60** and the energy limiting capacitor **62**. The voltage across the switch **34** then falls. When the voltage drops to essentially zero, then the switch **34** can be turned on with no switching loss. The rate of fall of current and the reverse recovery current during the turn off of the diode **36** is limited by the inductor **94**, therefore the turn off losses of the boost diode **36** can also be reduced.

[0034] Turning now to **FIG. 7, a** circuit comprising a fifth embodiment of the present invention is shown. This embodiment functions similar to the first embodiment, but the component count of this circuit is less. The capacitor **62** in the coupler chain and the discharge chain of the first embodiment are replaced by an active switch **100**, which couples the boost converter to the DC/DC converter. The coupler chain, including the diode **60**, the switch **100** and the inductor **94**, can softly turn off the boost diode **36** and reduce the turn on voltage of the switch **34** by selecting proper gate driving timing of the four switches **34**, **40**, **42**, and **100**. The inductor **94** provides soft turn off of the diode **36** and reduces voltage stress turn on for the switches **34**, **40**, and **42**.

[0035] In the previous embodiments, an energy limiting capacitor **62** limits energy transfer from the PFC boost converter side to the DC/DC converter side. Another diode **64** and an inductor **66** release the stored energy of the capacitor **62** through the discharge chain. In the fifth embodiment, these components are replaced by the small active switch **100** which limits the energy transfer between the boost converter and the DC/DC converter during the switching transient by timing the gate signals of the switch **100** based upon the timing signals for the other gates **34**, **40**, and **42**.

[0036] With respect to **FIGS. 8A** to **8D**, graphs of the driving waveforms for the switches of the circuit of **FIG. 7** are shown. **FIGS. 8A** to **8C** are similar to **FIGS. 3A** to **3C**, which are the gate drives for the switches **40**, **42**, and **34**, respectively. As shown in **FIG. 8D**, the additional switch **100** is programmed to turn on before the switch **42** turns off. The switch **100** remains on throughout the transient during which the switches **34** and **40** switch on softly and the switch **42** turns off softly. Afterwards, this auxiliary switch **100** will then turn off and stop energy flow between the boost converter and the DC/DC converter side. This auxiliary switch **100** does not need to handle main power transfer, and it can be a very small MOSFET which operates for a short period of time.

[0037] The embodiments described herein are examples of structures having elements corresponding to the elements of the invention recited in the claims. This written description may enable those skilled in the art to make and use embodiments having alternative elements that likewise correspond to the elements of the invention recited in the claims. The intended scope of the invention thus includes other structures that do not differ from the literal language of the claims, and further includes other structures with insubstantial differences from the literal language of the claims.

What is claimed is:

1. A power converter, comprising:

a boost converter that receives a rectified AC input and generates a high voltage output, the boost converter including a zero-voltage-switching transistor that is operable to adjust the power factor of the rectified AC input to generate the high voltage output;

a DC/DC converter coupled to the high voltage output of the boost converter and configured to generate a regu-

lated output voltage, the DC/DC converter including a complementary pair of zero-voltage-switching transistors that are operable to regulate the high voltage output of the boost converter to generate the regulated output voltage; and

a coupler chain coupled between a current-carrying terminal of the zero-voltage-switching transistor of the boost converter and current-carrying terminals of the complementary pair of zero-voltage-switching transistors in the DC/DC converter, the coupler chain being operable to reduce the voltage across the current-carrying terminals of at least one of the zero-voltage-switching-transistors.

2. The power converter of claim 1, further comprising:

a discharge chain coupled between the coupler chain and the high voltage output of the boost converter, the discharge chain being operable to discharge one or more reactive circuit components of the coupler chain.

3. The power converter of claim 1, wherein the boost converter includes a diode coupled in series between one input terminal of the boost converter and one output terminal of the boost converter and coupled to one current-carrying terminal of the zero-voltage-switching transistor in the boost converter, wherein the coupler chain is operable to reduce the flow of current through the diode at a controlled rate.

4. The power converter of claim 3, wherein the boost converter further includes an inductor coupled in series with the diode.

5. The power converter of claim 4, wherein the boost converter further includes a capacitor coupled in parallel between a positive output terminal and a negative output terminal of the boost converter.

6. The power converter of claim 1, wherein the coupler chain is coupled between the current-carrying terminal of the zero-voltage-switching transistor of the boost converter and a node connecting a current-carrying terminal of one of the complementary pair of zero-voltage-switching transistors with a current-carrying terminal of another of the complementary pair of zero-voltage-switching transistors.

7. The power converter of claim 6, wherein the coupled chain is coupled between a drain terminal of the zero-voltage-switching transistor of the boost converter and a node connecting a source terminal of one of the complementary pair of zero-voltage-switching transistors with a drain terminal of another of the complementary pair of zero-voltage-switching transistors.

8. The power converter of claim 1, wherein the DC/DC converter includes a transformer, and wherein the complementary pair of zero-voltage-switching transistors are operable to generate a series of voltage pulses feeding into a primary winding of the transformer, a secondary winding of the transformer generating the regulated output voltage of the DC/DC converter.

9. The power converter of claim 8, wherein the DC/DC converter includes a soft switch inductor coupled in series between the primary winding of the transformer and a node that connects a current-carrying terminal of one of the complementary pair of zero-voltage-switching transistors with a current-carrying terminal of another of the complementary pair of zero-voltage-switching transistors.

10. The power converter of claim 9, wherein the soft switch inductor is coupled in series between the primary winding of the transformer and the coupler chain.

11. The power converter of claim 8, wherein the DC/DC converter includes a rectifier and filter circuit coupled to the secondary winding of the transformer and operable to filter the regulated output voltage.

12. The power converter of claim 1, wherein the coupler chain includes an inductor, a diode and a capacitor coupled in series.

13. The power converter of claim 1, wherein the coupler chain includes a diode and a capacitor coupled in series.

14. The power converter of claim 1, wherein the coupler chain includes a diode coupled in series with the current-carrying terminals of a transistor.

15. The power converter of claim 2, wherein the discharge chain includes a diode couple in series with an inductor.

* * * * *